Cambridge Assessment International Education

# Cambridge International AS & A Level

| | | | | | | | | | |
|---|---|---|---|---|---|---|---|---|---|
| CANDIDATE NAME | | | | | | | | | |
| CENTRE NUMBER | | | | | | CANDIDATE NUMBER | | | | |

*5966019032*

**PHYSICS** **9702/52**

Paper 5 Planning, Analysis and Evaluation **May/June 2023**

**1 hour 15 minutes**

You must answer on the question paper.

No additional materials are needed.

**INSTRUCTIONS**

- Answer **all** questions.
- Use a black or dark blue pen. You may use an HB pencil for any diagrams or graphs.
- Write your name, centre number and candidate number in the boxes at the top of the page.
- Write your answer to each question in the space provided.
- Do **not** use an erasable pen or correction fluid.
- Do **not** write on any bar codes.
- You may use a calculator.
- You should show all your working and use appropriate units.

**INFORMATION**

- The total mark for this paper is 30.
- The number of marks for each question or part question is shown in brackets [ ].

This document has **8** pages.


© UCLES 2023

**1** Two coils, P and Q, are placed close to each other, as shown in Fig. 1.1.

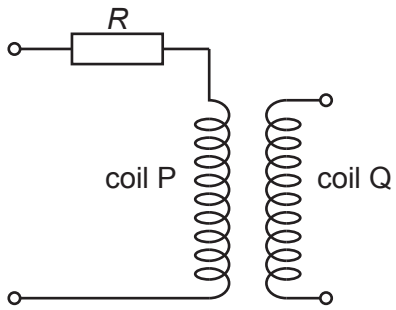


**Fig. 1.1**

A resistor of resistance $R$ is connected in series with coil P.

A changing magnetic flux of frequency $f$ in coil P causes an electromotive force (e.m.f.) $E$ to be induced across the terminals of coil Q.

It is suggested that $E$ is related to $R$ by the relationship

$$E = 2\pi f M \left(\frac{V}{R + k}\right)$$

where $V$ is the potential difference across the resistor and coil P, and $k$ and $M$ are constants.

Plan a laboratory experiment to test the relationship between $E$ and $R$.

Draw a diagram showing the arrangement of your equipment.

Explain how the results could be used to determine values for $k$ and $M$.

In your plan you should include:

- the procedure to be followed
- the measurements to be taken
- the control of variables
- the analysis of the data
- any safety precautions to be taken.

© UCLES 2023

**Diagram**

.....

.....

.....

.....

.....

.....

.....

.....

.....

.....

.....

.....

.....

.....

[15]

**2** A student investigates how the volume of a gas varies with its temperature. Air is trapped in a transparent cylinder of diameter $d$ with a movable piston as shown in Fig. 2.1.

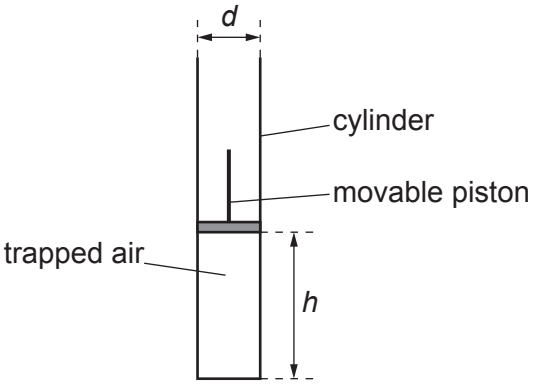


**Fig. 2.1**

The distance between the base of the cylinder and the bottom of the piston is $h$.

The trapped air is heated by placing the cylinder in water of temperature $\theta$. The increase in temperature of the trapped air causes the piston to move. When the piston stops moving, the value of $h$ is measured.

For each value of $h$, the volume $V$ of the trapped air is calculated.

The experiment is repeated for different values of $\theta$.

It is suggested that $V$ and $\theta$ are related by the equation

$$pV = Yk(\theta + Z)$$

where $k$ is the Boltzmann constant, $p$ is the atmospheric pressure, and $Y$ and $Z$ are constants.

**(a)** A graph is plotted of $V$ on the $y$-axis against $\theta$ on the $x$-axis.

Determine expressions for the gradient and $y$-intercept.

gradient = .....

$y$-intercept = .....

[1]

**(b)** Values of $\theta$ and $h$ are given in Table 2.1.

**Table 2.1**

| $\theta$ / °C | $h$ / mm | $V / 10^{-5}\,m^3$ |
|---|---|---|
| 23 | 62.4 ± 0.1 | |
| 35 | 65.2 ± 0.1 | |
| 48 | 68.1 ± 0.1 | |
| 62 | 70.9 ± 0.1 | |
| 73 | 73.3 ± 0.1 | |
| 88 | 76.1 ± 0.1 | |

The value of $d$ is (27.9 ± 0.1) mm.
The volume $V$ is calculated using the relationship

$$V = \frac{\pi d^2 h}{4}.$$

Calculate and record values of $V / 10^{-5}\,m^3$ in Table 2.1.
Include the absolute uncertainties in $V$. [2]

**(c)** **(i)** Plot a graph of $V / 10^{-5}\,m^3$ against $\theta$ / °C. Include error bars for $V$. [2]

**(ii)** Draw the straight line of best fit and a worst acceptable straight line on your graph. Label both lines. [2]

**(iii)** Determine the gradient of the line of best fit. Include the absolute uncertainty in your answer.

gradient = ..... [2]

© UCLES 2023

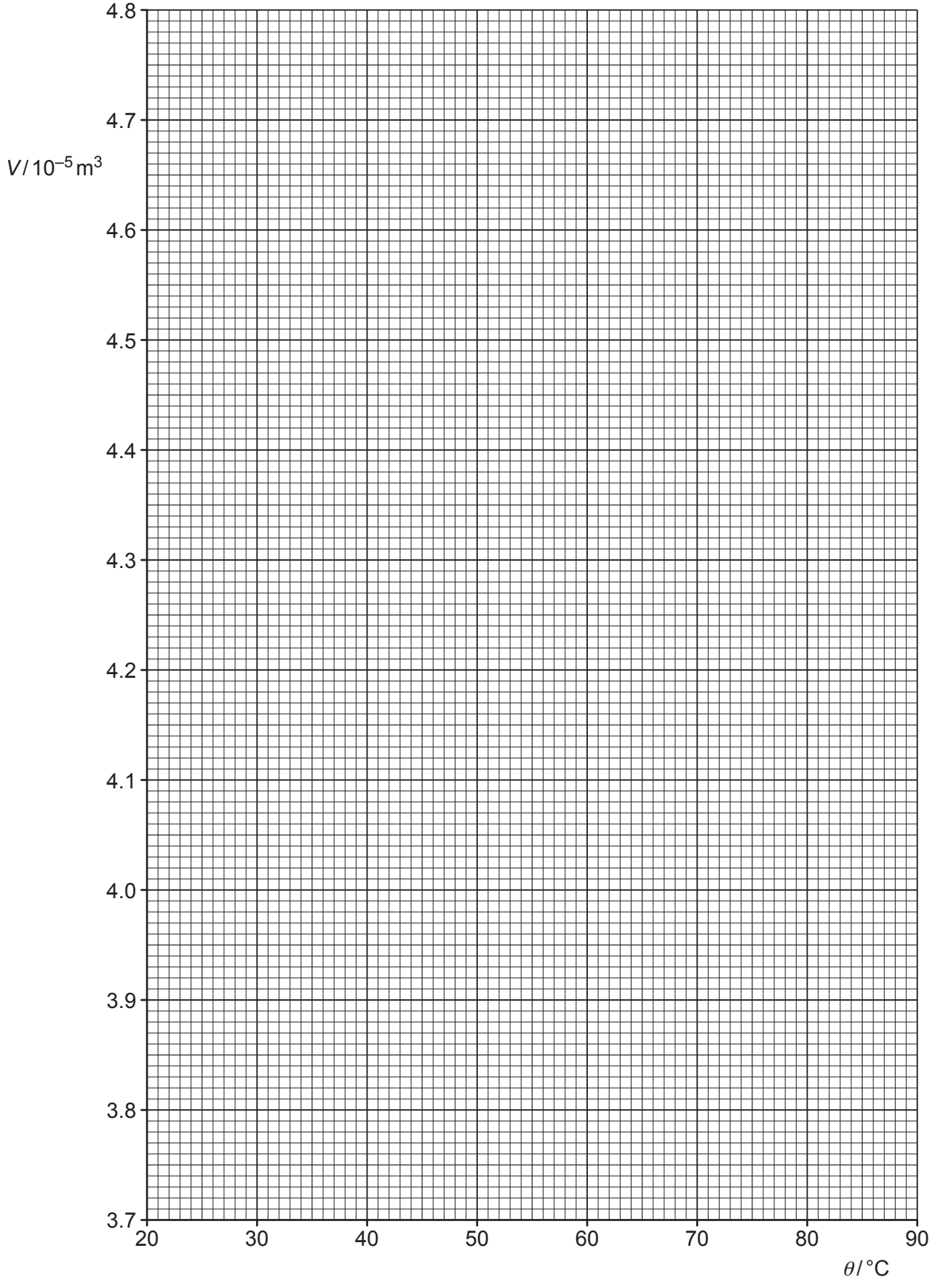
4.8
4.7
$V / 10^{-5}\,m^3$
4.6
4.5
4.4
4.3
4.2
4.1
4.0
3.9
3.8
3.7
20
30
40
50
60
70
80
90
$\theta$ / °C

**(iv)** Determine the *y*-intercept of the line of best fit. Include the absolute uncertainty in your answer.

*y*-intercept = ..... [2]

**(d) (i)** Using your answers to **(a)**, **(c)(iii)** and **(c)(iv)**, determine the values of *Y* and *Z*. Include appropriate units.

Data: $p = (1.01 \pm 0.01) \times 10^5\,\text{Pa}$
$k = 1.38 \times 10^{-23}\,\text{J K}^{-1}$

*Y* = .....

*Z* = .....
[2]

**(ii)** Determine the percentage uncertainty in *Y*.

percentage uncertainty in *Y* = ..... % [1]

**(e)** The experiment is repeated. Determine the temperature $\theta$ that gives a value of *h* of 60.0 mm.

$\theta$ = ..... °C [1]

[Total: 15]

To avoid the issue of disclosure of answer-related information to candidates, all copyright acknowledgements are reproduced online in the Cambridge Assessment International Education Copyright Acknowledgements Booklet. This is produced for each series of examinations and is freely available to download at www.cambridgeinternational.org after the live examination series.

© UCLES 2023